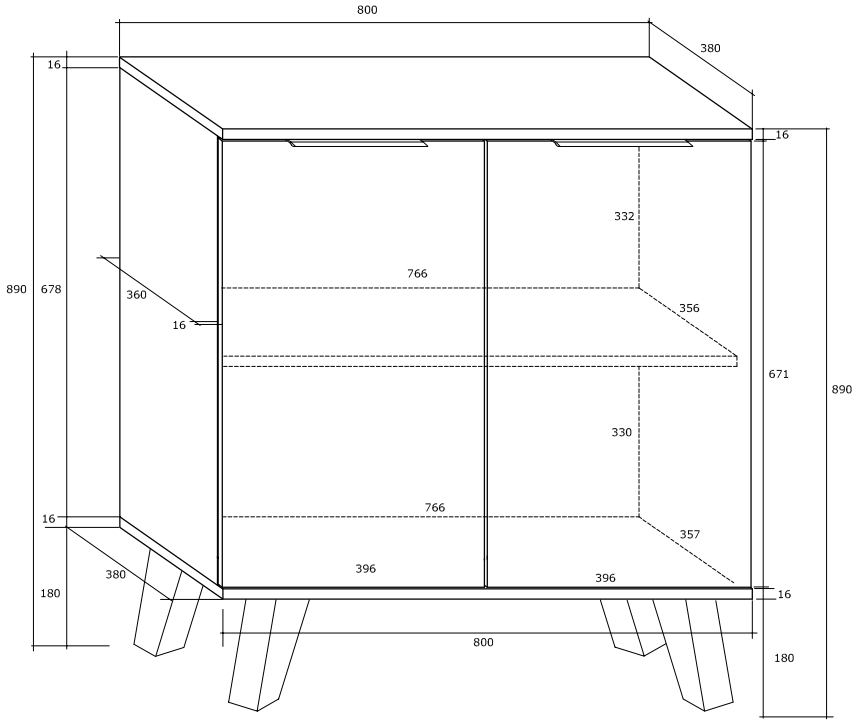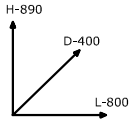SVN-01
KOMODA 2D